N°6 cave

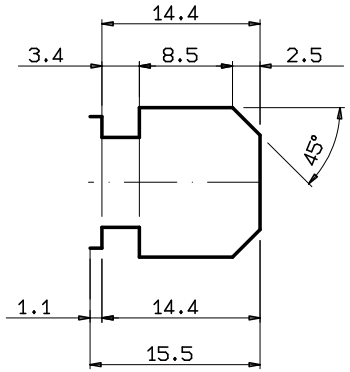
14.4
3.4
8.5
2.5
45°
1.1
14.4
15.5

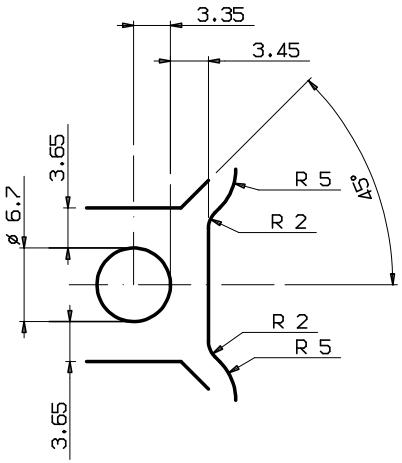
3.35
3.45
3.65
ø 6.7
R 5
45°
R 2
R 2
R 5
3.65

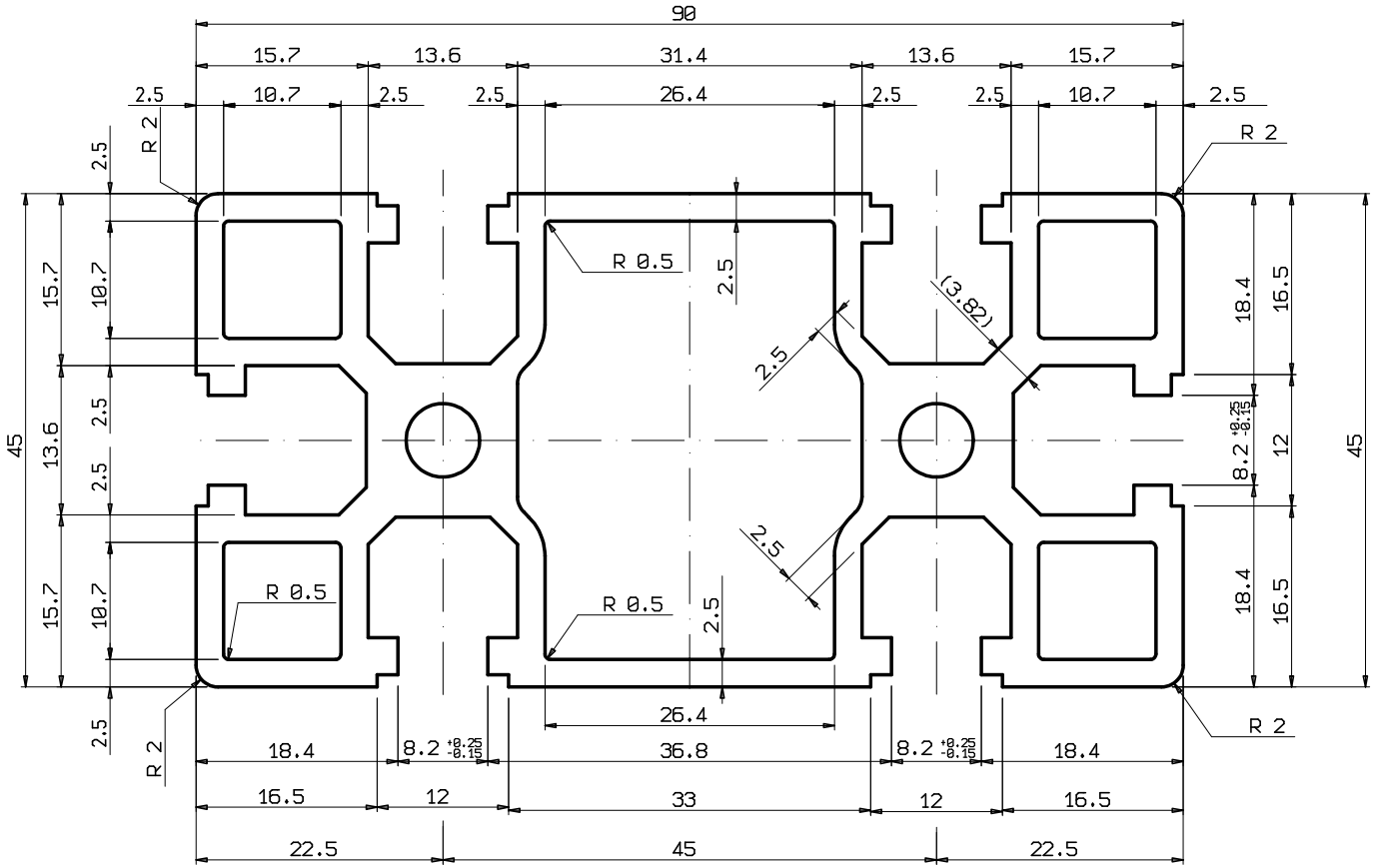
90
15.7
13.6
31.4
13.6
15.7
2.5
10.7
2.5
2.5
26.4
2.5
2.5
10.7
2.5
R 2
R 2
R 0.5
R 0.5
R 0.5
R 2
R 2
(3.82)
2.5
2.5
2.5
45
13.6
15.7
10.7
2.5
2.5
15.7
10.7
2.5
18.4
16.5
8.2 +0.25 -0.15
12
18.4
16.5
45
26.4
18.4
8.2 +0.25 -0.15
36.8
8.2 +0.25 -0.15
18.4
16.5
12
33
12
16.5
22.5
45
22.5